ISSN 2229-5518

An Advanced Way of Controlling and Monitoring Train Parameters Using Multi-channel Sensor Technology

V.Sujith Sai Krishna

Abstract— The main objective of this proposal is to automate control and communication systems of the train using Multi-channel Sensor Technology. This method will overcome the difficulties faced by the existing methods such as detecting cracks at rails, monitoring distance between rails, compartments monitoring, fire and smoke monitoring, fire and smoke monitoring in compartments and controlling of motors, transformers, pantograph etc, by manual operations. As Wireless Sensor Node (WSN) and high energy laser based ultrasonic approach are available in the recent techniques, Train Automation (TA) can be resourcefully done for managing train parameters and monitoring any abnormal conditions in real-time without delays and accidents. To speed up the operations, all received data will be quickly processed by Multi-channel sensors with help of Multi-core Embedded Software. From the point of view of energy efficient, train automation is an interesting approach to the challenges of traffic fluidity control, energy efficient driving, regenerative braking and managing power consumption in electric devices in train.To reduce human errors and get the fast response.

Index Terms— Multi-channel Sensor, Multi-core Embedded software, Wireless Sensor Nodes(WSN), Train automation (TA), Pantograph, Traffic fluidity control and Ultrasonic.

1 Introduction

Train automation (TA) will strongly enhance the safety, speed and control characteristics of train in real time without requiring of physical manpower. Due to advent of Wireless communication technologies and high speed Powerful Processors, Automation will be done to satisfy the flexibility, realibility, efficiency of trains. Generally, Multi-core processor is an integrated circuit to which more than two processors have been attached for enhanced performance, reduced power consumption and more efficient simultaneous processing of multiple tasks. Ideally, a dual core processor is nearly twice as powerful as a single core processor. In practice, performance gains are said to be about fifty percent: a dual core processor is likely to be about one-and-a-half times as powerful as a single core processor. Multi-core processing is a growing industry trend as single processors rapidly reach the physically limits of possible complexity and sppen. Companies that have produced or are working on multi-core products include AMD, ARM, Broadcom, Intel and VIA. Due to parallel processing, speed of operation will be very fast like pipelining operation to get required results in real-time. Multi-core processors are widely used across many application domains including general-purpose, embedded, network, digital signal processing (DSP) and graphics. Although there is failure in the one processor, the tasks will be quickly exchanged with other processor without much delay. It is very useful for Embedded Applications. Wireless Sensor Network consists of spatially distributed autonomous sensors to cooperatively monitor physical or environmental conditions, such as temperature, smoke, sound, vibration and pressure, etc.. The train automation could be done for train protection and assurance, train operation, train supervision and communication.

- *V. Sujith Sai Krishna pursuing Bachelor of Engineering in Electronics and Communicatio Engineering in Narayana Engineering College under JNTU Anathapur University, India, PH-+91 9494634252. Email-sujithsai97@gmail.com*
- *Sindhu LathaSenthil pursuing Bachelor of Engineering in Electronics and Communication Engineering inVelammal Institute of Technology under Anna University, India,PH-+91 9043775446. Email-sls161991@gmail.com*

2 Existing Method

Monitoring fire accidents at coaches and other adnormalities will be tracked and processed with single processor or controller may give output with more delay as well as slow response. Monitoring electric and thermal parameters level in Electric Locomotive (ELE) manually will not be an efficient methods.

Detecting cracks at rails and checking track dimensions manually cannot provide excellent results. Although the modern trains have come up with latest technologies to run and control trains

3 Proposed System

This proposed system gives the efficient way of automating trains using Multi-channel Sensor Technology along with other modules to reduce human operational errors, power consumption, high reliability and fast operation without delay. It consists of hardware and software modules to execute the train operations.

3.1 Requirements

The following are the hardware used in the system :

- Ultrasonic Sensor
- Metal Detector
- LDR
- Thermistor
- Processor
- DC Motor
- Relay
- Touch Sensor

The following are the software used in the system:

- MPLABX
- VB

3.2 System Architecture

The system consists of many functional units such as Ultrasonic rail inspection unit; Track Dimensions monitoring unit; Monitoring of compartments presence in wireless mode and Embedded processor centrfal unit, etc.

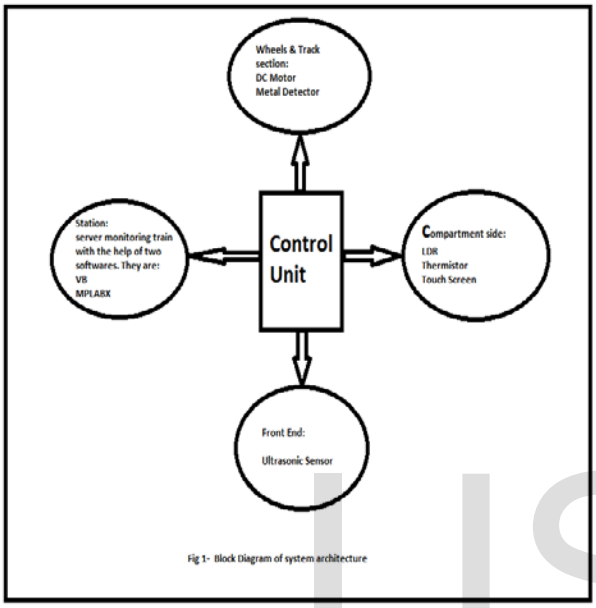

Fig 1- Block Diagram of system architecture

Here Multi-channel sensors play vital role i.e. it is heart of this system. Every functional unit could be interfaced with a Processor using wired and wireless mode. Fig.1 shows Block Diagram of the system.

4 Hardware Modules of the System

4.1 Multi-core Embedded Processor

Many number of Embedded processor have been fabricated on a single chip. Big job will be divided into more number of tasks with priority. Each task will ytilize the corresponding processor and execute their application in real-time quickly. Owing to MCEP, if there is any failure in one processor, automatically running task will easily switch over into other processor withput delay. As a result, overall efficiency and response of the system will be increased.

4.2 Ultrasonic Rail Flaw Inspection Control Unit

Defect monitoring may be affected by rail surface condition, railhead geometry, defect geometry and orientation, electrical and/or mechanical noise introduced into the trace coupling, to avoid this problem ultrasonic sensor is used. This method consists of a pulsed laser and an air-coupled transducer will be mounted at the front side of engine. It has several advantages like flexible to discover cracks; inspection is non-contact and remote; presence of oil on the rail surface and inspection speed is higher. This unit output will be fed to one of the input of MCEP for futher processing.

4.3 Track Dimension Monitoring Unit

Track monitoring unit helps to maintain the safety rail tracks by monitoring settlement, twist and distance between two rails. This system is more helpful when nearby constructive activities occur or area endangered by landslides or washouts. Due to availability of sensors like Track Settlement Sensors and Track Twist Sensors, this system will monitor the track in real-time and then data will be wirelessly transmitted to MCEP to alert train controls.

4.4 Temperature and Smoke Monitoring Unit

Sensors like Wireless Temperature and Smoke Sensor at coaches, train will stop automatically if there is any fire accidents and smokes arive in compartments. These sensors consists of RF transceiver, Microcontroller and solar batteries. The microcontroller always checks the threshold value in real-time, if there is any smokes and quickly sends data to receive part of MCEP unit for futher processing.

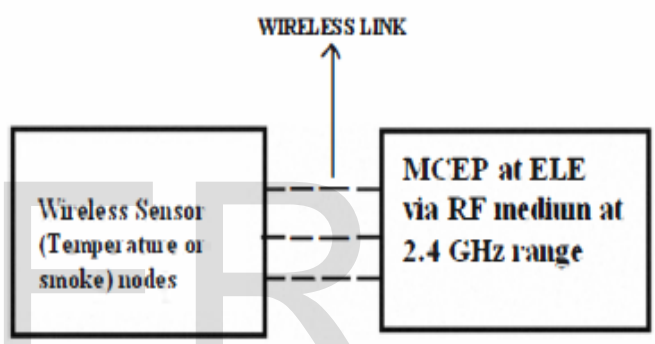

Fig-2 Block Diagram Representation of wireless sensors in compartments

4.5 User Friendly Touch Sensor

Every compartment in train has a touch screen sensor which has in built applications like Panatry service, Emergency calling in need of doctors, Tracking the current position of the train, Knowing next station and the time to reach destination station. The particular application selected by the passanger in train will be intimated to the control unit and the futher process will be done by connecting to the compartment and seat number to the service provider.

4.6 Control Unit

The DC series motors and Transformers will be automatically operated and contrlloed by PIC. Without presence of Loco pilots and Coach Guards, braking both loco and compartments in real-time and Voltage/Current level monitoring will be done using PIC with help of respective sensors placed at corresponding places. Using radio module, compartments will be monitored using distance or proximity sensor nodes at two compartments linking point. Railway bearing minitor at loco usues advanced technology to minitor axle bearing defects with real time analysis and trending software built-in allowing for optimum rail network performance. If there is any defect in bearing, then train will be stopped. Heat dissipation will be monitored using temperature sensors in individual compart-

ments.

6 Software Used

6.1 MP LABX

The MPLAB X IDE is the new graphical, integrated debugging tool set for all of Microchip's more than 800 8-bit, 16-bit and 32-bit MCUs and digital signal controllers, and memory devices.Detailed information. MPLAB Integrated Development Environment (IDE) is a free, integrated toolset for the development of embedded applications employing Microchip's PIC.

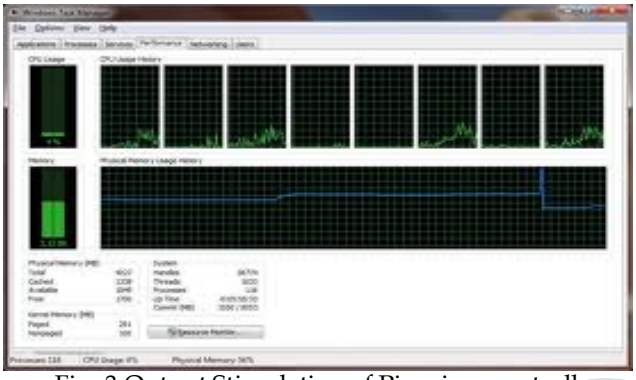

Fig- 3 Output Stimulation of Pic micro-controller

6.2 Visual Basics

Visual Basics is third generation event driven programming language and integrated development environment (IDE) from Microsoft. Here in this proposal we used VB to monitor train while it is moving from one station to other. If suppose train stops in middle then "Red light" will glow in the screen else the train is in normal condition . This is used mainly to track the train and to visually monitor the train parameter. This software is installed in the main server in all stations so that station master can guide driver and guard accordingly.

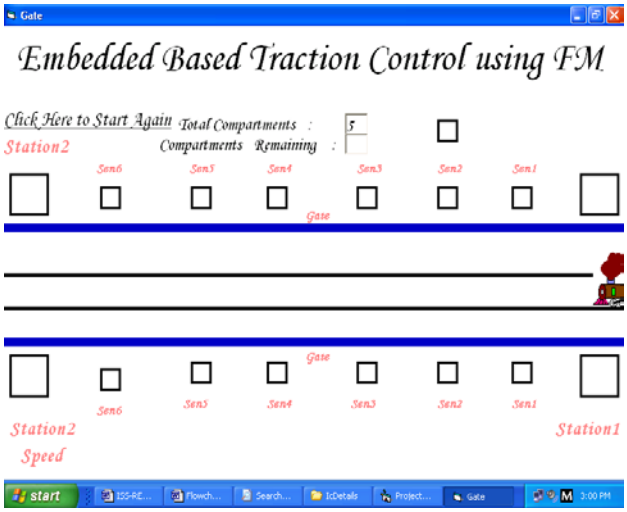

Fig-4 Visual View of train by the main server in the near by station

4 Conclusion

All train parameters, rail flaw inspection and other parameters could be controlled by advent of MCEP. If there is any problems in such a flaw in rails; track dimension problems; more heat dissipation in motors and transformers; any faults at braking axle ; smoke arrival and fire accidents in the coaches; coaches monitoring data will be wirelessly sent to MCEP and then further proceed. In the point to avoid human errors, Multi-channel sensors are vital part of the design an embedded system with more reliable and less power consumption for train operations. This proposal gives better accuracy, very fastes operation in real-time where the human life is very important.

Acknowledgment

I am obliged to staff members of NSIC Guindy and my mentor Mr. Senthil, Orbit Technologies Pvt Ltd, for the valuable information provided by them in embedded system, locomotive engineering and wireless sensor technology. I am grateful for their cooperation during the period of my project.

References

[1] Raja opal Nagarajan, "The challenges of Multi-core Technology", System Software Practice Mind Tree Ltd.
[2] Philip A. Laplante, Frederick C. Woolsey, "IEEE 1473: An open source communications Protocol for Railway Vehicles",IT Professional, Vol. 5, no. 6, pp: 12-16, Nov/Dec 2003, DOI: 10. 1109/MITP. 2003 :1254963
[3] http:///www.multicoreinfo.com
[4] http://www.railquip.com/pages/laser.html
[5] Nadier,H. Mirabadi, A."Railway Track Condition Monitoring using FBG and FPI Fiber Optic Sensors", The Institution of Engineering and Technology International Conference On Railway Condition Monitoring 29-30; Noc. 2006,pp: 198-203.
[6] http://www.electrochemsolutions.com/df/TS1.pdf
[7] http://www.railway-technology.com
[8] A.N. Baybakov, V.M. Gurenko, S.P. Yunoshev, S.V. Plotnikov, V.V. Sotnikov, and K.P. Kascheev. Compressive inspection of geometric parameters of running freight car wheel pairs.In ISMTII Conference Proceeding, 2003.
[9] D.Kuespert .S.Pieper and P. Hesser .MATTILD- Mainline and transmit train impact load detector. Signal and Draht, 1-2:23-27,2003.
[10] A. Schoebel. Risk analysis to determine locations for way sie train inspection systems. Presentation in German, 6 2004.